CEI UPM

Centro de Electrónica Industrial

# Reguladores de CA

Monofásicos

cei@upm.es

Universidad Politécnica de Madrid

POLITÉCNICA

# Problema

***PROBLEMA 3.*** (2 puntos)

En el regulador de alterna de la figura, dibujar la tensión y la corriente en la carga para un ángulo de disparo $\alpha$=60º en los siguientes casos:

a) Carga resistiva pura.

b) Carga R-L siendo $\text{arctg}\,\frac{\omega L}{R} = 30^{\circ}$

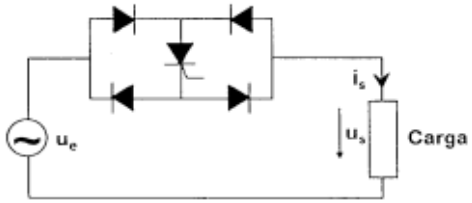


a)

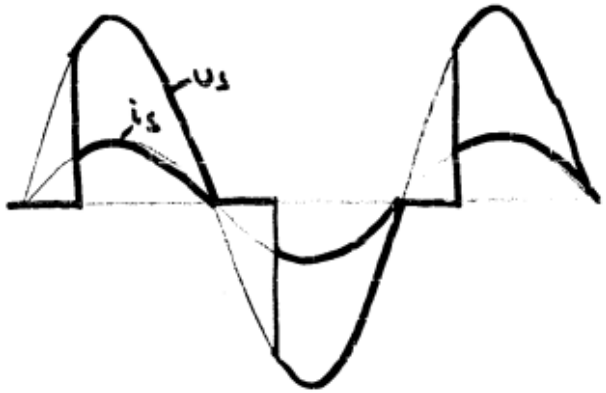


b) Este regulador no se puede emplear con una carga inductiva ya que el tiristor no es capaz de bloquear la tensión directa cuando deja de conducir.

# Problema

***CUESTIÓN 2.*** *(2 puntos)*

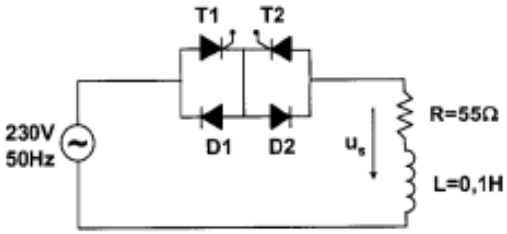


Los tiristores del regulador de la figura se disparan con un ángulo de retraso de 60º respecto al paso por cero de la tensión de red. Se pide:

a) Dibujar la forma de onda de tensión y corriente en la carga.
b) Indicar la máxima tensión inversa y directa soportada por los tiristores.

$$\varphi = \operatorname{arctg} \frac{\omega L}{R} = 29'7^\circ \simeq 30^\circ$$

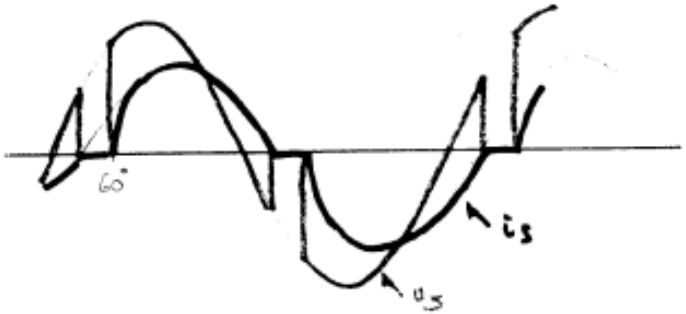


$$U_{T,DIR,MAX} = U_p \cdot \operatorname{sen} 60^\circ = 231\ V.$$

$U_{T,INV,MAX} = 0$ ya que tiene un diodo en antiparalelo

# Problema

**CUESTION 4**

El regulador de alterna de la figura alimenta una bombilla cuyo equivalente es una resistencia ($R=1k\Omega$) en serie con una inductancia ($L=1mH$). Se pide:

a) Calcular el ángulo de retardo $\alpha$ en el disparo del interruptor $S$ para que la potencia entregada sea de 30W.

b) Dibuje las formas de onda de tensión e intensidad en la carga.

c) ¿Qué dispositivo utilizaría como interruptor?

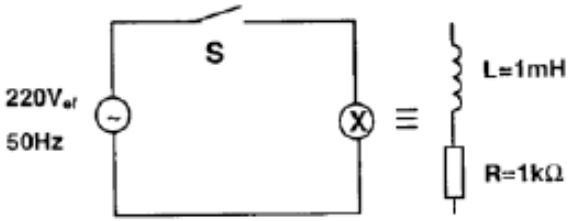

# Problema

CUESTION 4

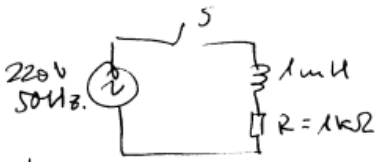


Calculamos la constante de tiempo:

$$\tau = \frac{L}{R} = \frac{1\,mH}{1\,k\Omega} = 1\,\mu s \ll 10\,ms,$$ que es el semiperiodo de la tensión

Podemos asumir que el transitorio que se produce en cada conexión de S es despreciable en el tiempo.

$$P = \frac{U_{ef}^2}{R} = 30\,W \Rightarrow U_{ef}^2 = 30 \cdot 1k = 30.000\ V^2$$

$$U_{ef} = 173'2$$

$$U_{ef}^2 = \frac{1}{\pi}\int_{\alpha}^{\pi} (220 \cdot \sqrt{2} \cdot \operatorname{sen}\omega t)^2\, d\omega t$$

$$= \frac{220^2 \cdot \cancel{2}}{\pi}\int_{\alpha}^{\pi} \frac{1-\cos 2\omega t}{\cancel{2}}\, d\omega t$$

$$= \frac{220^2}{\pi} \cdot \left[(\pi-\alpha) + \frac{\operatorname{sen} 2\alpha - \cancel{\operatorname{sen} 2\pi}^{\,0}}{2}\right] = 30.000$$

$$(\pi-\alpha) + \frac{\operatorname{sen} 2\alpha}{2} = 1'947$$

$$\operatorname{sen} 2\alpha = -2'38 + 2\alpha \Rightarrow \boxed{\alpha \cong 78'9^\circ}$$

gráficamente:

Transición muy rápido

f = 50Hz
P = 30W
Bidirecc

⇒ TRIAC.

CEI UPM

Centro de Electrónica Industrial

# Cicloconvertidores

cei@upm.es

# AC to AC

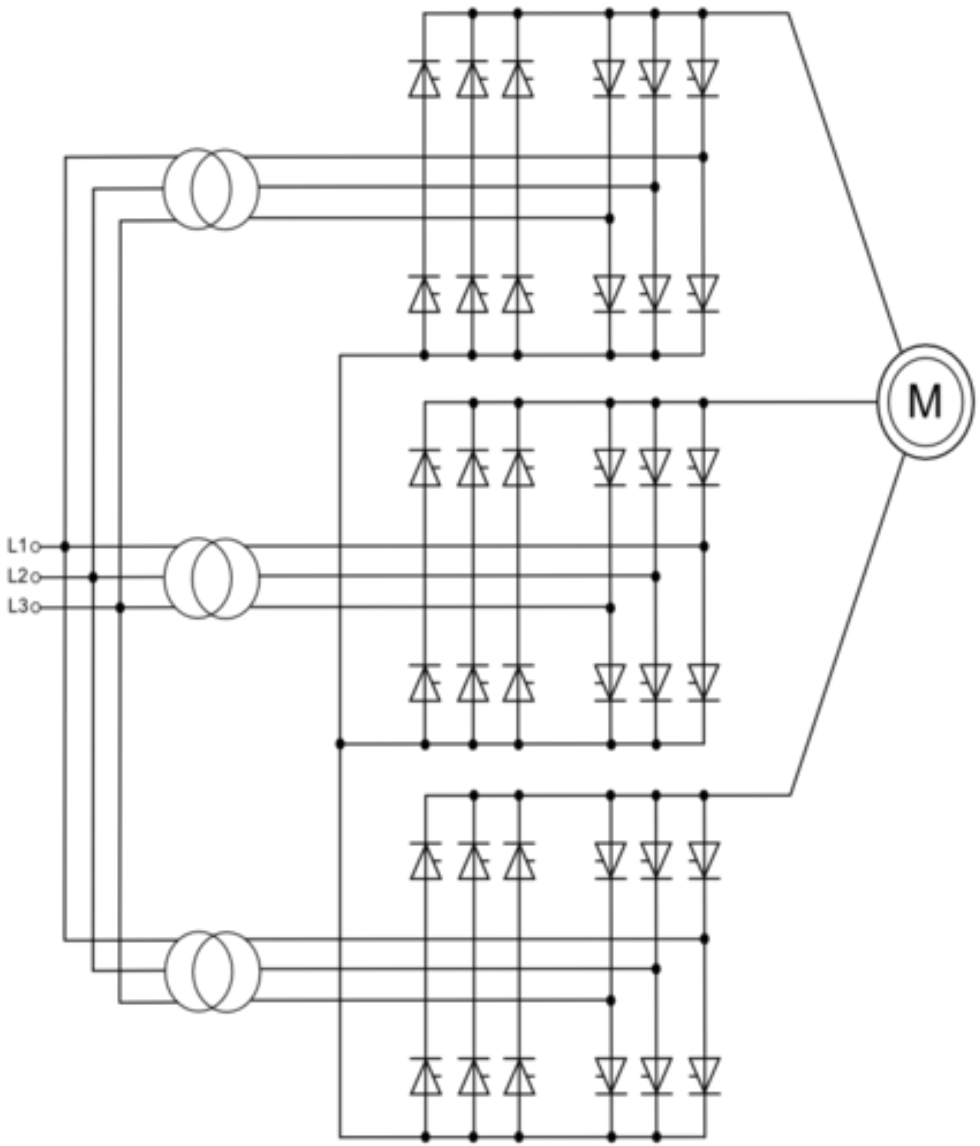


MW

- The AC output is SYNTHESIZED modulating a Rectifier
- Similar to INVETERS, though the input is AC instead of DC….
- And the frequencies are far smaller

# Cycloconverter

From Wikipedia, the free encyclopedia

*For the rotating electrical machine, see Rotary converter*

A **cycloconverter** (CCV) or a **cycloinverter** converts a constant voltage, constant frequency AC waveform to another AC waveform of a lower frequency by synthesizing the output waveform from segments of the AC supply without an intermediate DC link (Dorf 1993, pp. 2241–2243 and Lander 1993, p. 181). There are two main types of CCVs, circulating current type or blocking mode type, most commercial high power products being of the blocking mode type.[2]

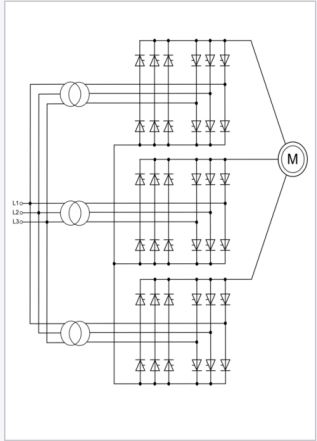


Topology of blocking mode cycloconverter[1]

**Contents** [hide]


1 Characteristics
2 Applications
3 Harmonics
4 References


## Characteristics [ edit ]

Whereas phase-controlled SCR switching devices can be used throughout the range of CCVs, low cost, low-power TRIAC-based CCVs are inherently reserved for resistive load applications. The amplitude and frequency of converters' output voltage are both variable. The output to input frequency ratio of a three-phase CCV must be less than about one-third for circulating current mode CCVs or one-half for blocking mode CCVs.(Lander 1993, p. 188)[3] Output waveform quality improves as the *pulse number* of switching-device bridges in phase-shifted configuration increases in CCV's input. In general, CCVs can be with 1-phase/1-phase, 3-phase/1-phase and 3-phase/3-phase input/output configurations, most applications however being 3-phase/3-phase.[1]

## Applications [ edit ]

The competitive power rating span of standardized CCVs ranges from few megawatts up to many tens of megawatts. CCVs are used for driving mine hoists, rolling mill main motors,[4] ball mills for ore processing, cement kilns, ship propulsion systems,[5] slip power recovery wound-rotor induction motors (i.e., Scherbius drives) and aircraft 400 Hz power generation.[6] The variable-frequency output of a cycloconverter can be reduced essentially to zero. This means that very large motors can be started on full load at very slow revolutions, and brought gradually up to full speed. This is invaluable with, for example, ball mills, allowing starting with a full load rather than the alternative of having to start the mill with an empty barrel then progressively load it to full capacity. A fully loaded "hard start" for such equipment would essentially be applying full power to a stalled motor. Variable speed and reversing are essential to processes such as hot-rolling steel mills. Previously, SCR-controlled DC motors were used, needing regular brush/commutator servicing and delivering lower efficiency. Cycloconverter-driven synchronous motors need less maintenance and give greater reliability and efficiency. Single-phase bridge CCVs have also been used extensively in electric traction applications to for example produce 25 Hz power in the U.S. and 16 2/3 Hz power in Europe.[7][8]

Whereas phase-controlled converters including CCVs are gradually being replaced by faster PWM self-controlled converters based on IGBT, GTO, IGCT and other switching devices, these older classical converters are still used at the higher end of the power rating range of these applications.[3]

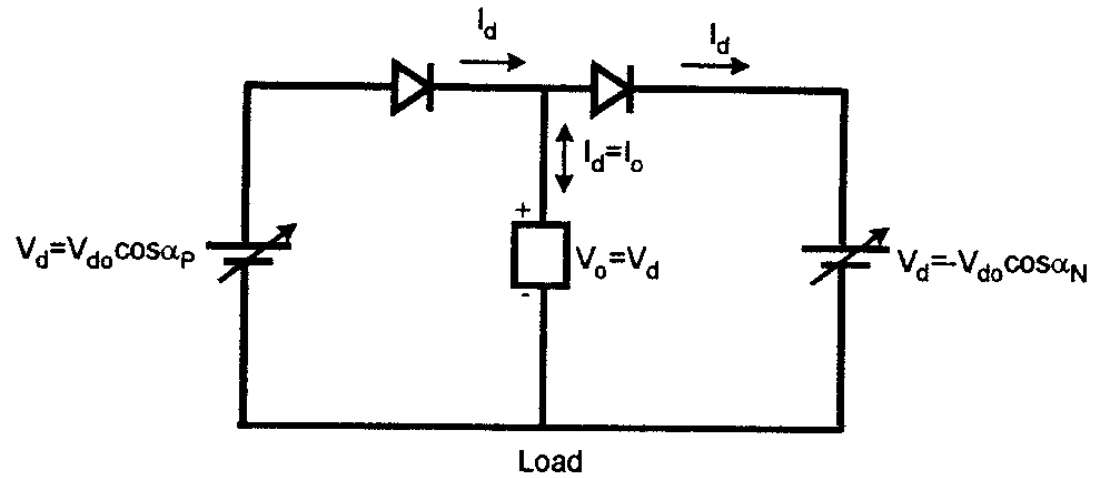


**Figure 4.8** Thevenin-equivalent circuit of dual converter

B.K. Bose

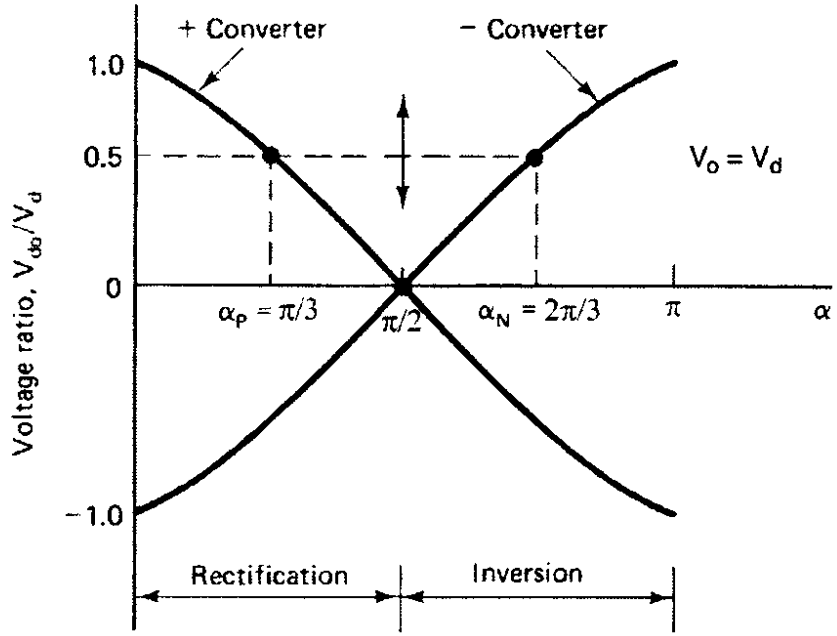


**Figure 4.9** Voltage-tracking control in dual converter showing firing angle relations

CEI UPM

# CYCLOCONVERTERS

Burak Ozpineci, Leon M. Tolbert
Department of Electrical and Computer Engineering
University of Tennessee-Knoxville
Knoxville, TN 37996-2100

# Introduction

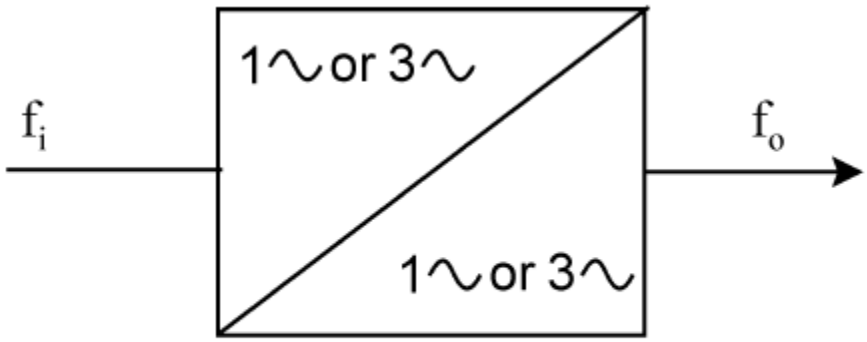


Cycloconverter

Some applications of cycloconverters are:

- Cement mill drives
- Ship propulsion drives
- Rolling mill drives
- Scherbius drives
- Ore grinding mills
- Mine winders

# Concept

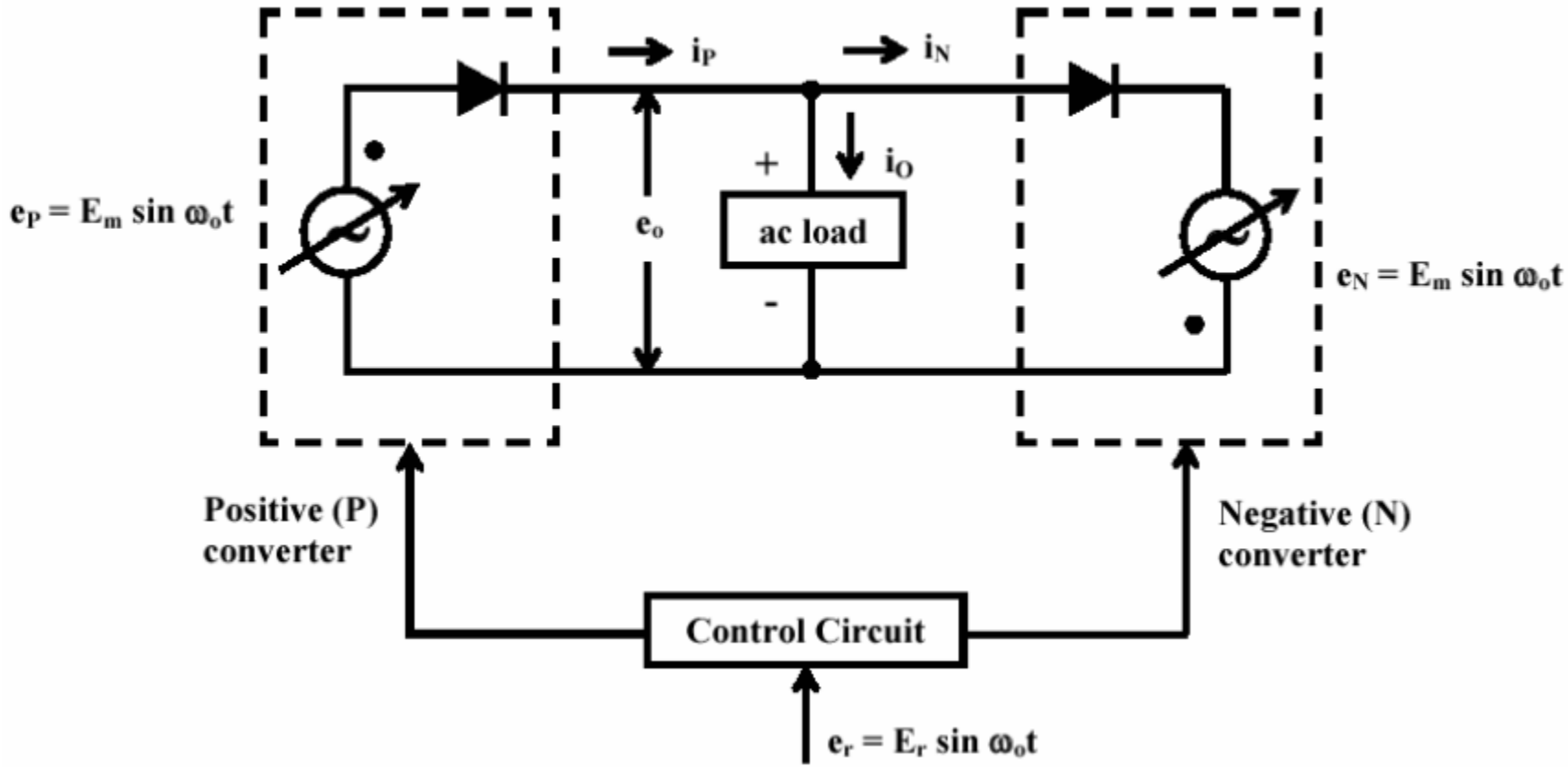
$i_P$
$i_N$
$i_O$
+
-
$e_o$
ac load
$e_P = E_m \sin \omega_o t$
$e_N = E_m \sin \omega_o t$
Positive (P) converter
Negative (N) converter
Control Circuit
$e_r = E_r \sin \omega_o t$

# Concept

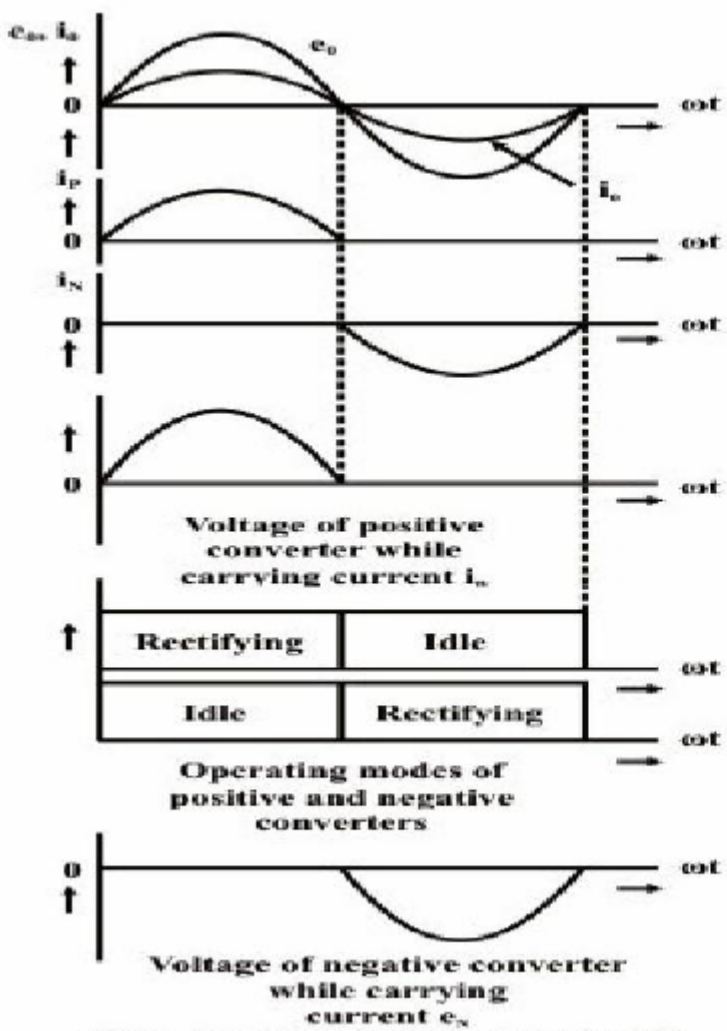


(a) Load displacement angle $\Phi_o = 0°$

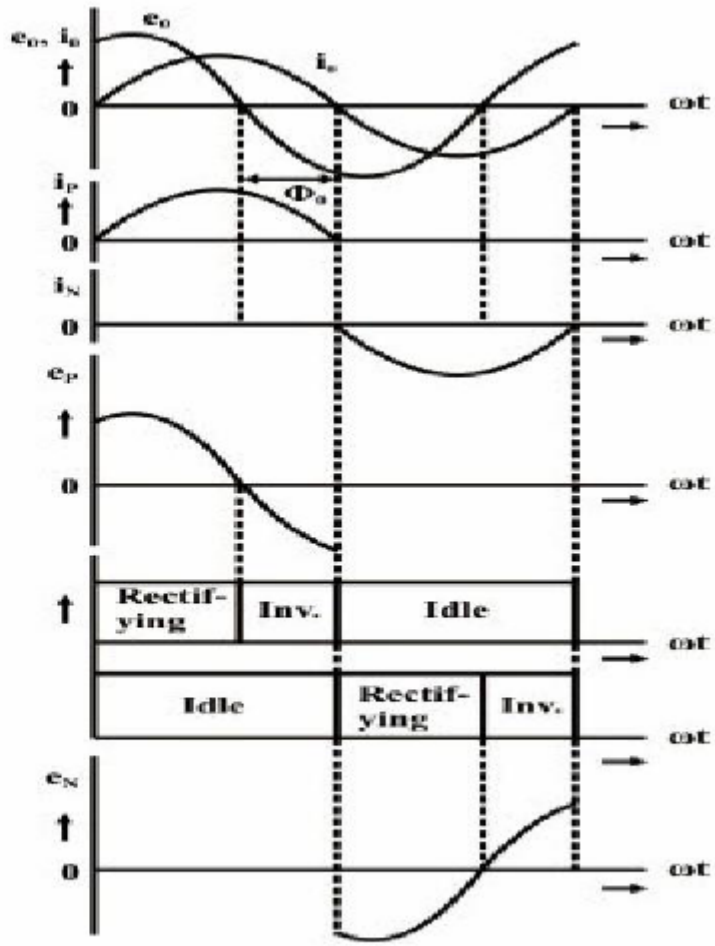


(b) $\Phi_o = -60°$

# Concept: 1 phase – 1 phase

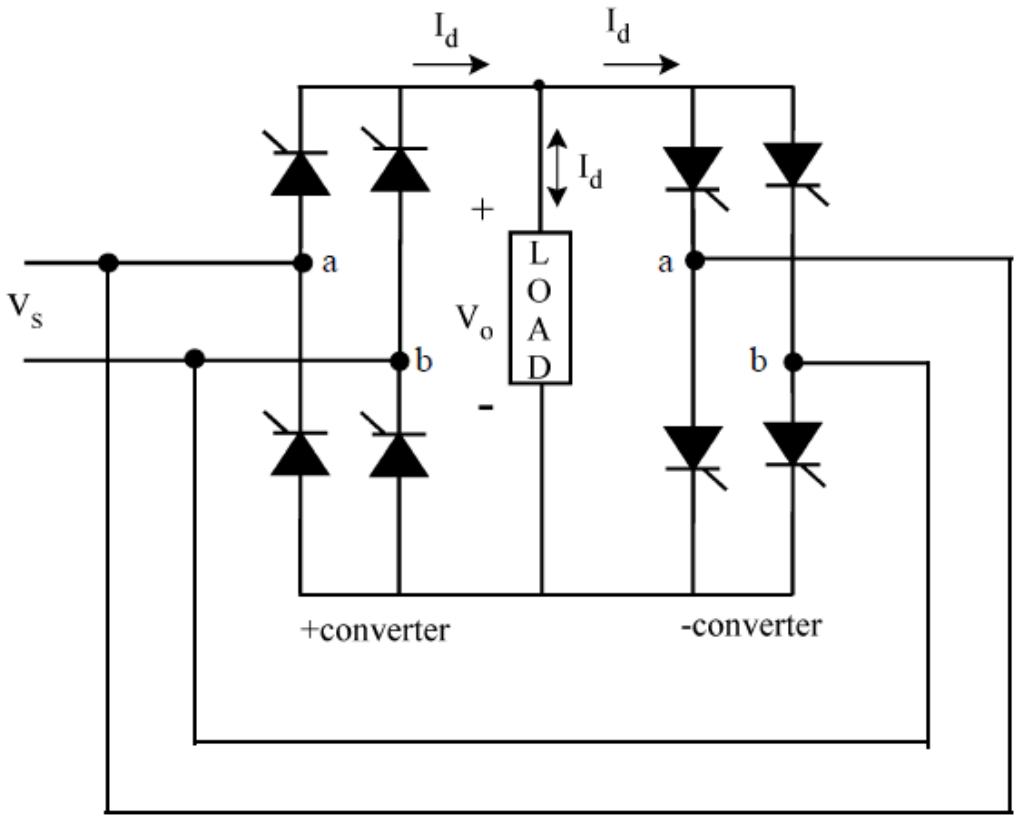


**Fig. 2** Single-phase to single-phase cycloconverter

# Concept

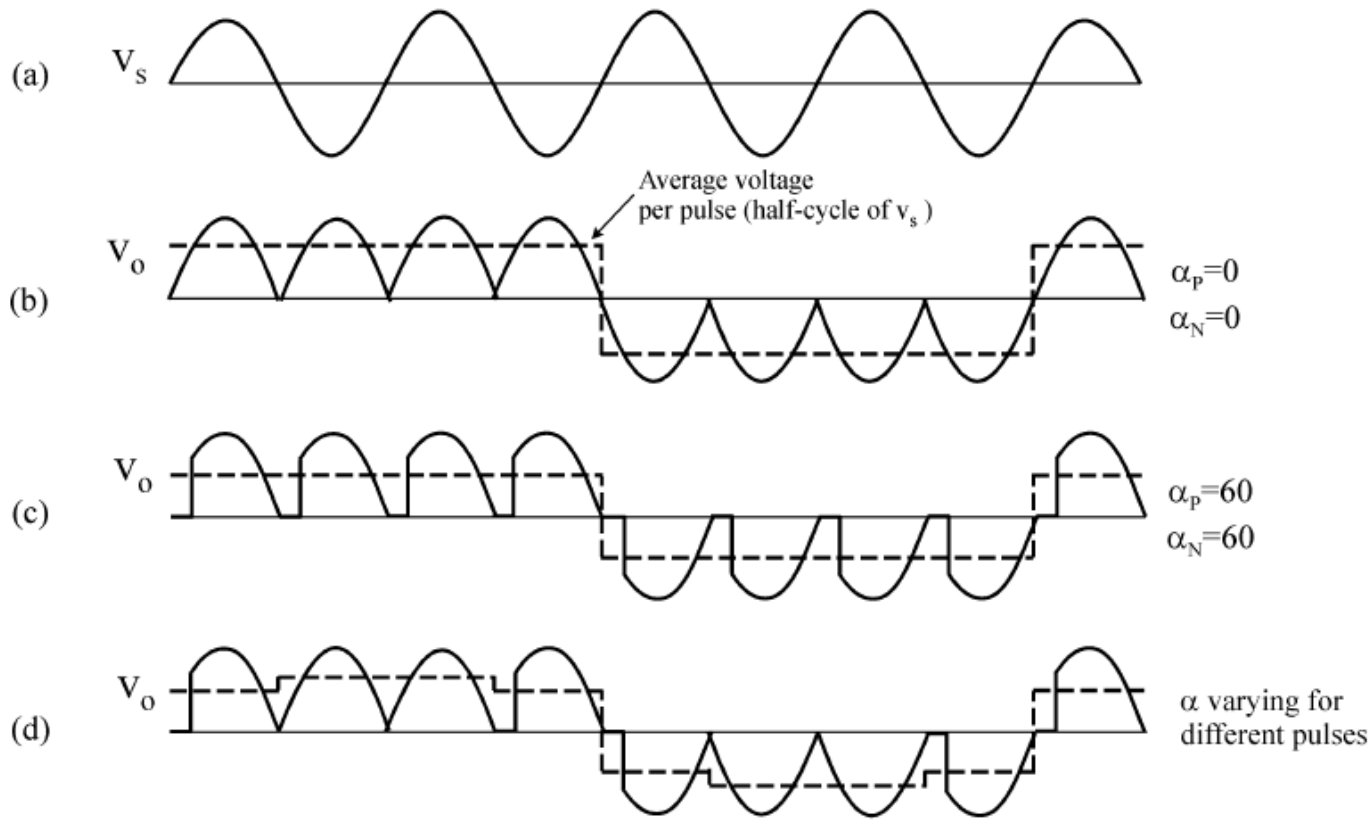


**Fig. 3** Single-phase to single-phase cycloconverter waveforms
**a)** input voltage
**b)** output voltage for zero firing angle
**c)** output voltage with firing angle π/3 rad.
**d)** output voltage with varying firing angle

# 3-phase 1-phase

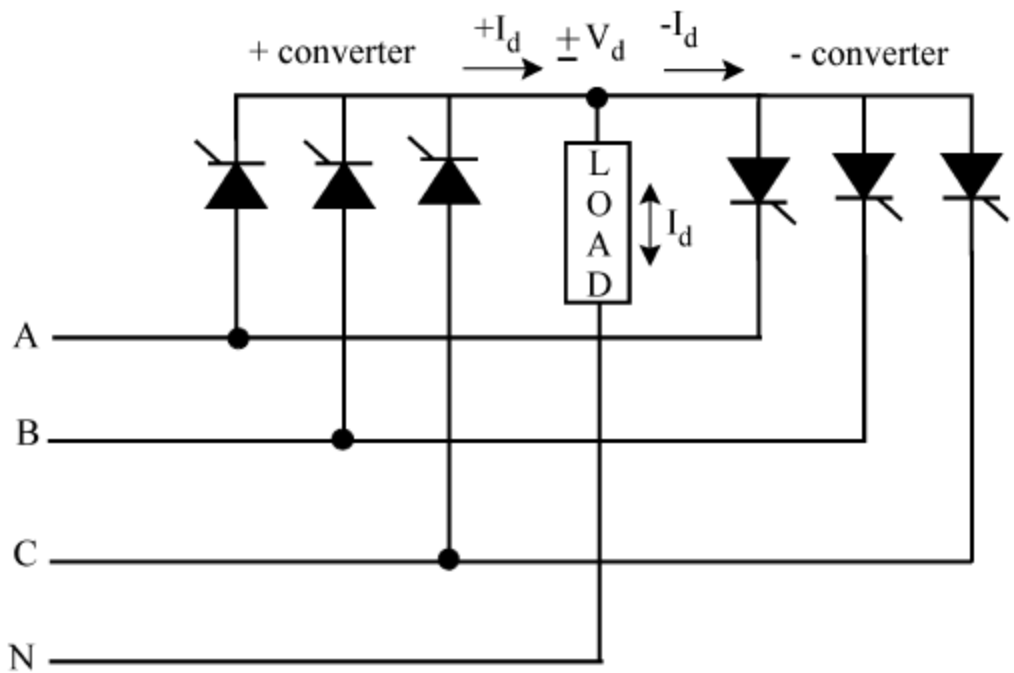


**Fig. 4** 3ϕ-1ϕ half-wave cycloconverter

# 3-phase 1-phase

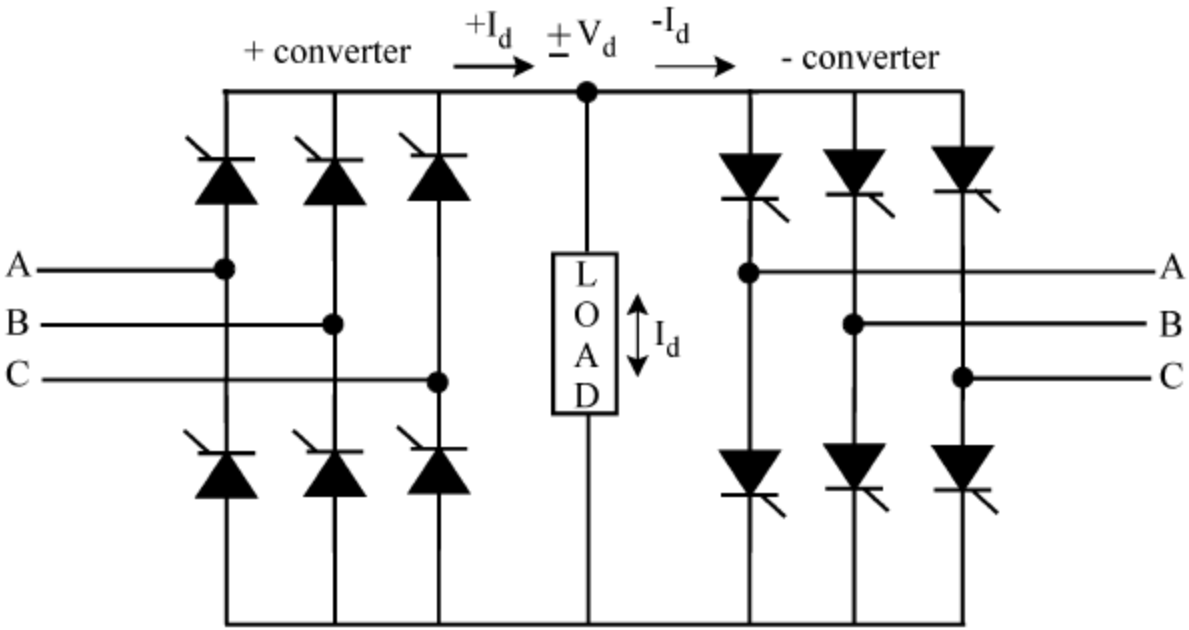


**Fig. 5** 3ϕ-1ϕ bridge cycloconverter

# 3-phase 1-phase

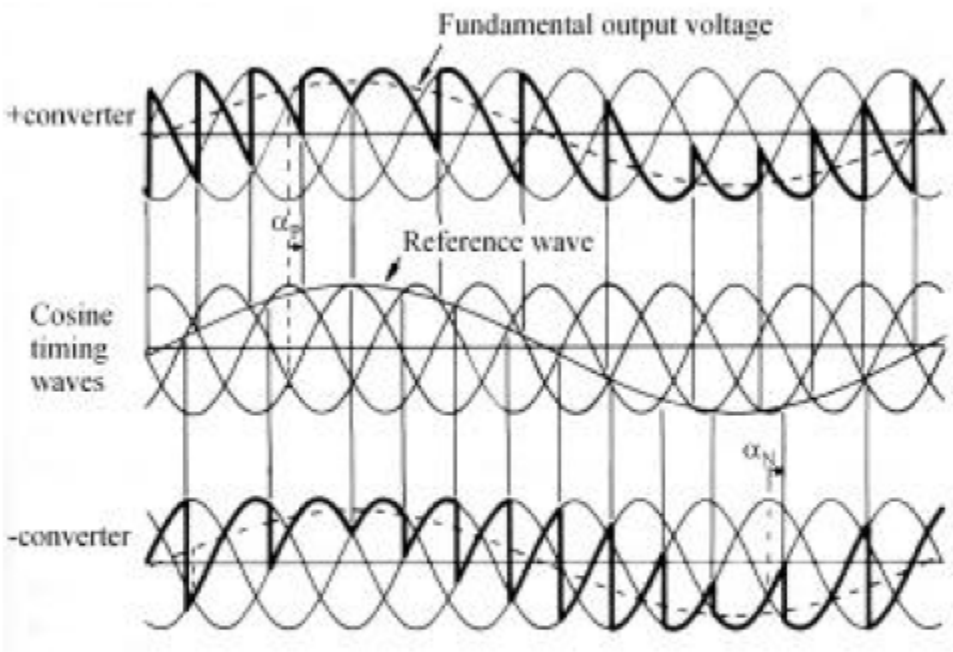


**Fig. 6** 3ϕ-1ϕ half-wave cycloconverter waveforms

**a)** + converter output voltage

**b)** cosine timing waves

**c)** – converter output voltage

# 3-phase – 3-phase

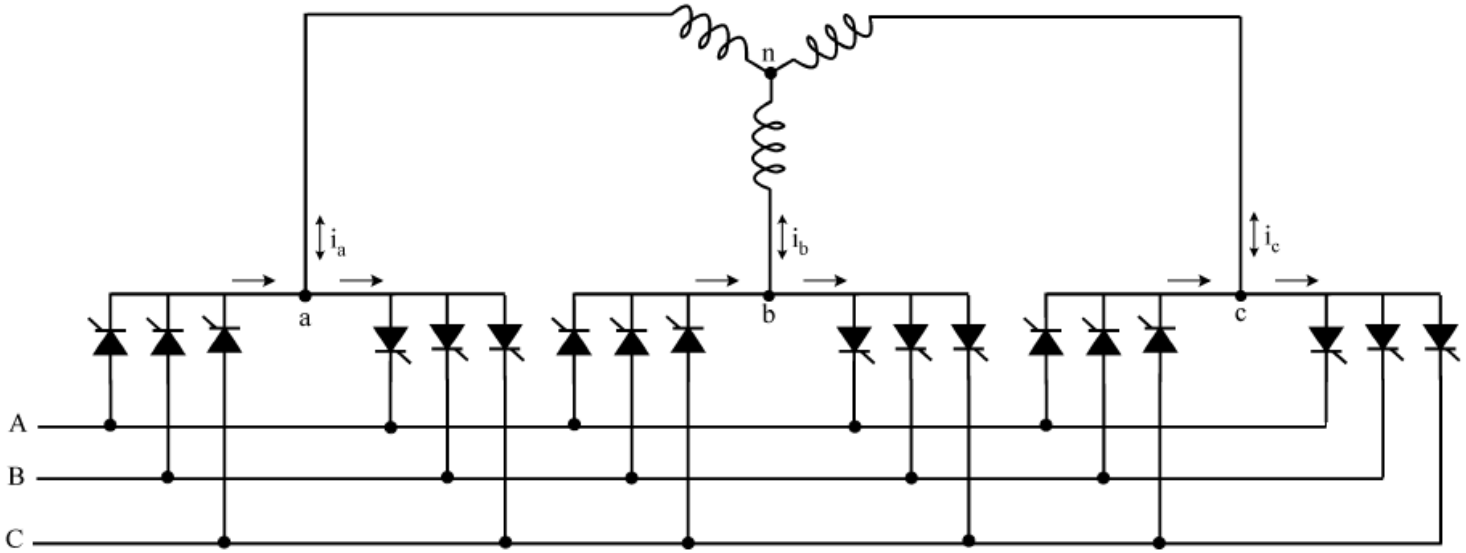


**Fig. 7** 3ϕ-3ϕ half-wave cycloconverter

# 3-phase – 3-phase

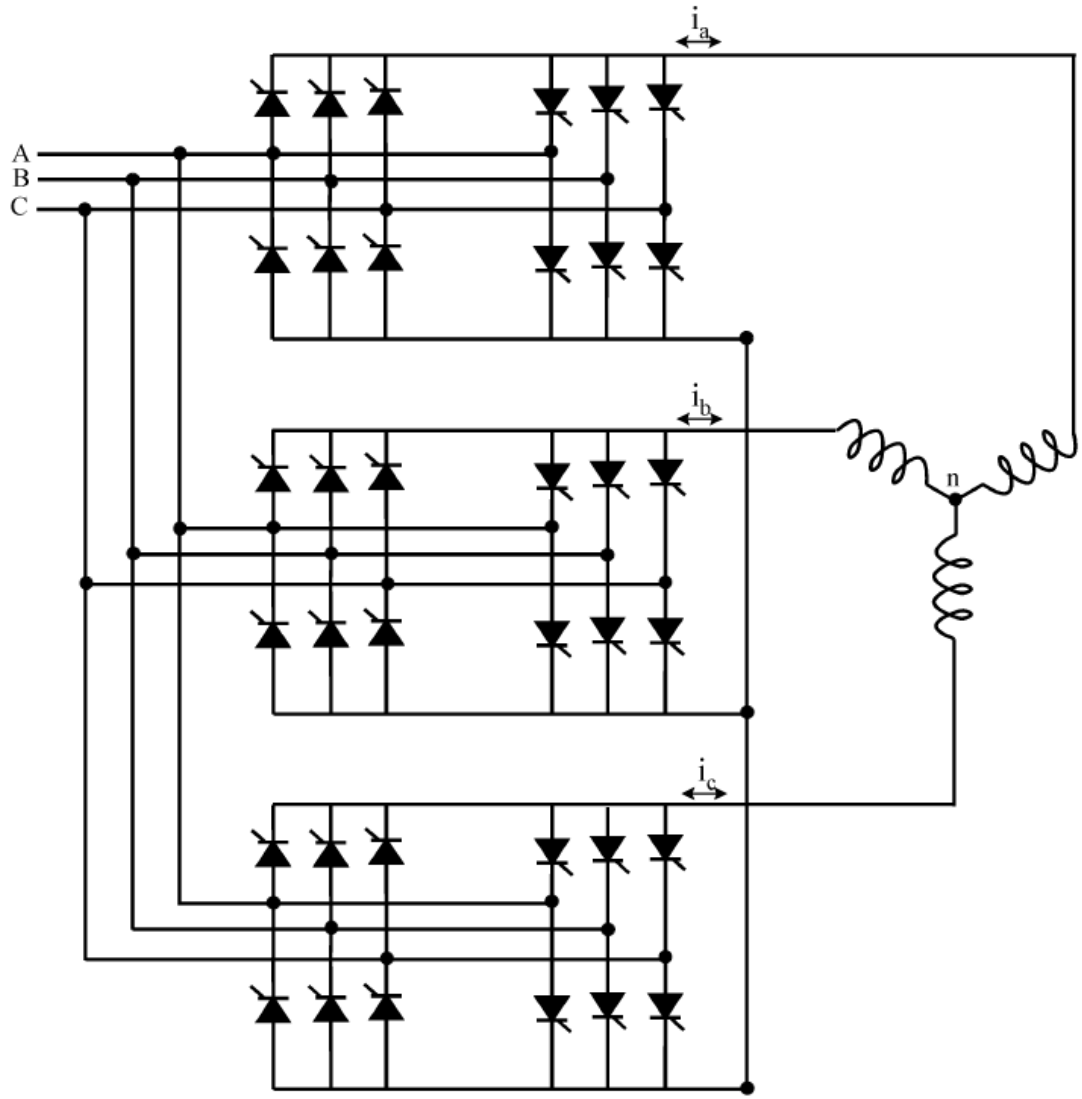


**Fig. 8** 3ϕ-3ϕ bridge cycloconverter

# Intergroup Reactor

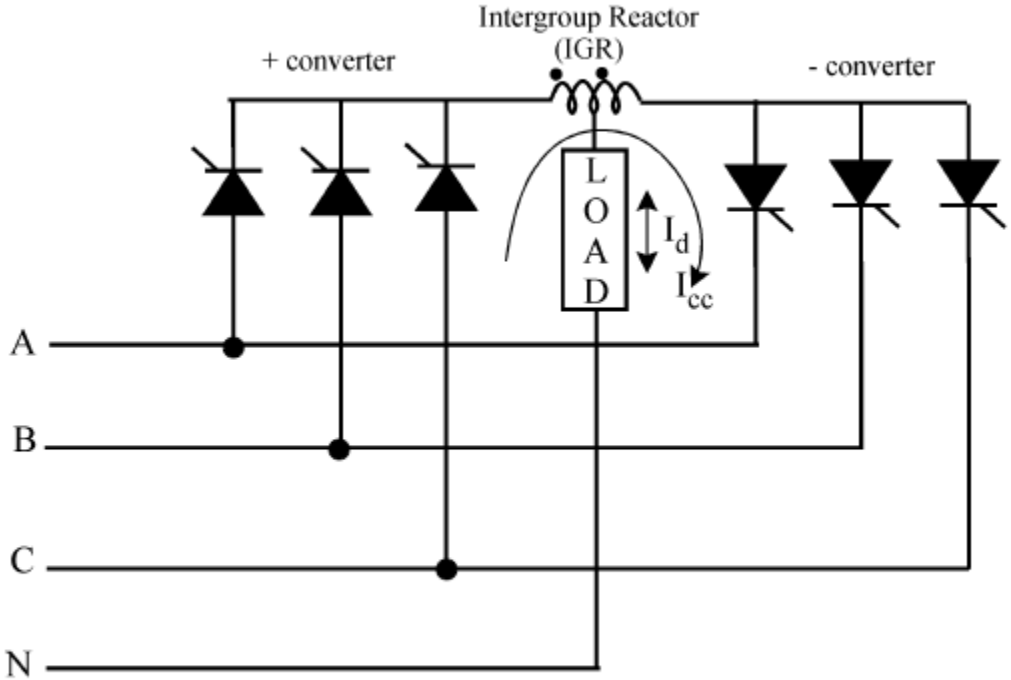


**Fig. 9** Circulating current and IGR

# Matrix converters

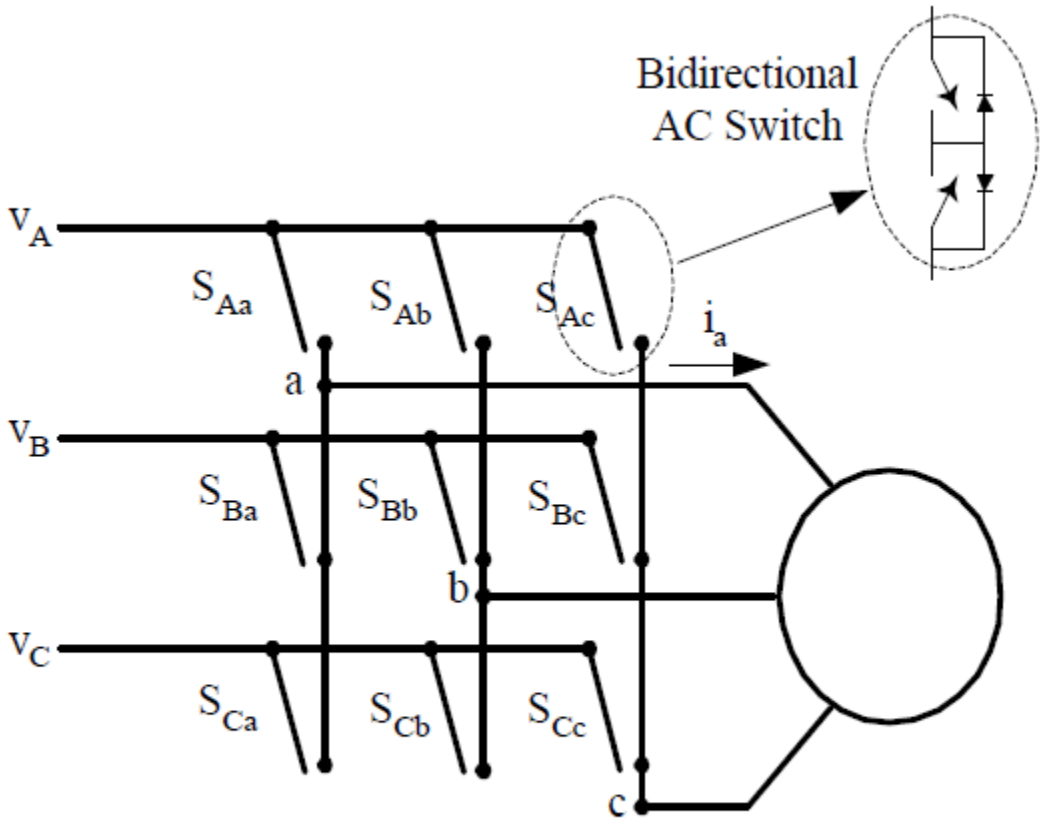


**Fig. 12** Matrix converter